Goldstep 48″

Table Top Banner

viewable area 47.5″x59″

Safe Area

All text and logos need to be inside the safe area.

Finished Size

This line indicates the final finished size. Use this line to create a clipping path of your final artwork.

UV INK PRINTING

We use state-of-the-art full color spectrum printers with white ink capability that directly print onto any media and then instantly dries with UV light.

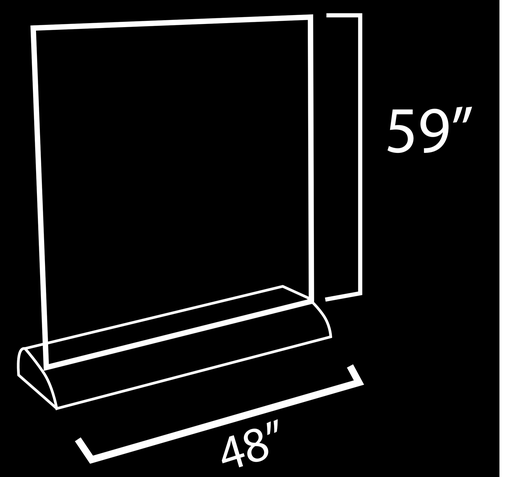

- **ALL IMAGES MUST BE EMBEDDED**
- **ALL FONTS MUST BE CONVERTED TO OUTLINES**
- **ARTWORK NEEDS TO BE IN CMYK MODE**

Please note that PMS colors will be converted to CMYK which can cause colors to shift.

If you require color matching, please ask for details on our color matching service.

VECTOR

B B

LINES IMAGE

- Adobe Illlustrator : (.ai - .pdf - .eps)
- All fonts Outlined
- Images Embeded

IMAGE

B

RASTER

- Adobe Photoshop : (.psd - .tiff - .jpg)
- 200 DPI at 100% Scale